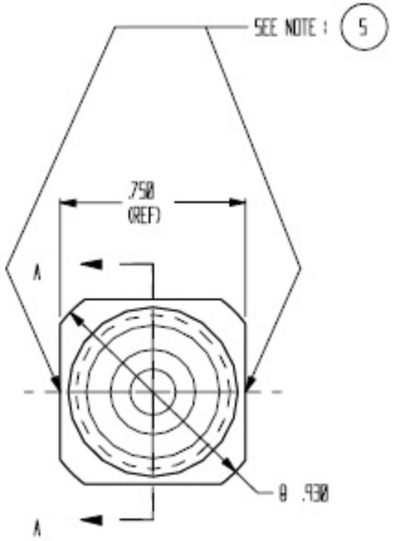

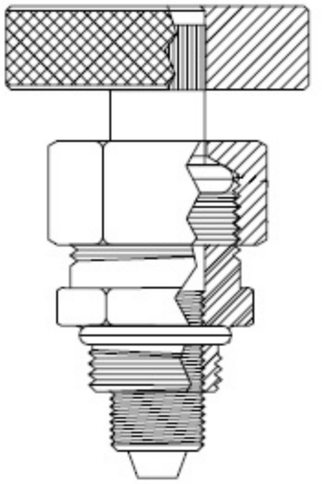

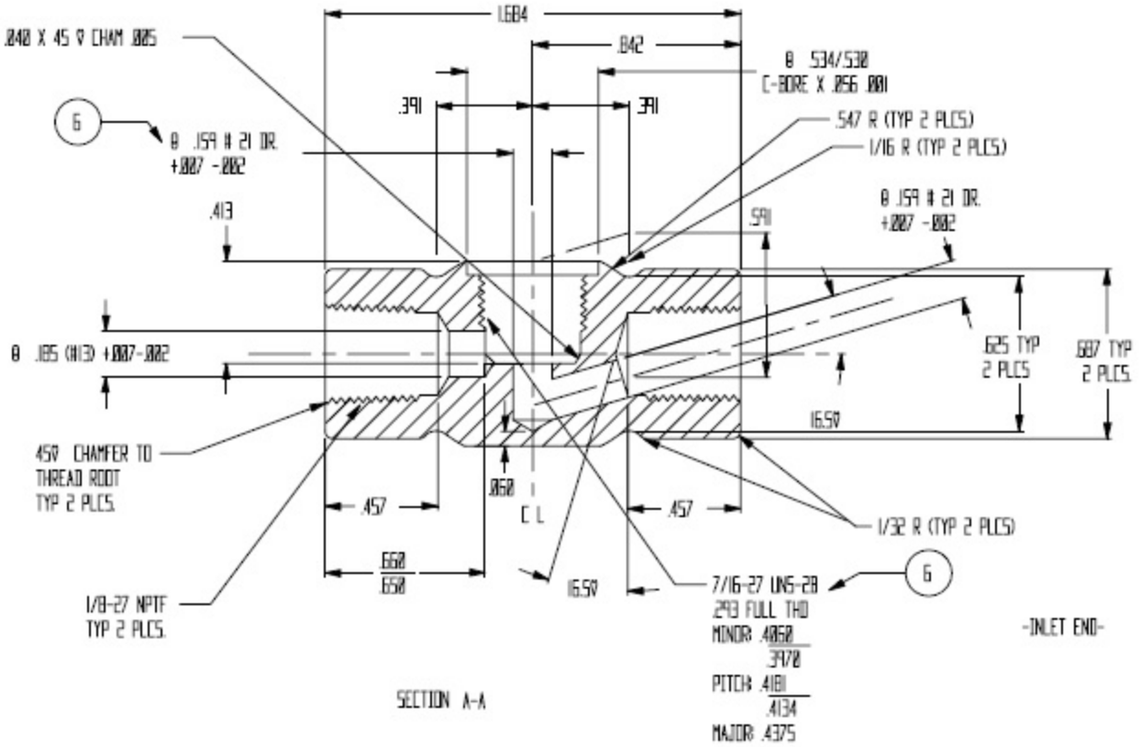

NOTE:

1. MATERIAL: 3/4" SQUARE BRASS ALLOY 360.
2. FINISH: NONE.
3. REMOVE ALL BURRS AND SHARP EDGES.
4. MAXIMUM FLAT ON DRILL POINTS - .015.

5. STAMP VALVE # VA111 AND FLOW DIRECTION USING 1/16 CHARACTERS. NO. ON ONE SIDE, ARROW ON OTHER.

6. #21 DRILL HOLE & 7/16-27 THREAD TO BE CONCENTRIC WITHIN .004 T.I.R.

7 . SURFACE FINISH: 125 ✓ TYPICAL

PROPRIETARY AND CONFIDENTIAL	Description		NAME	DATE	PART# VNF-2F-B	REV 1
THE INFORMATION CONTAINED IN THIS DRAWING IS THE SOLE PROPERTY OF INDUSTRIAL SPECIALTIES MFG. AND IS MED SPECIALITES. ANY REPRODUCTION IN PART OR AS A WHOLE WITHOUT THE WRITTEN PERMISSION OF INDUSTRIAL SPECIALTIES MFG. AND IS MED SPECIALITES IS PROHIBITED.	1/8" Female NPT Needle Valve, Brass	DRAWN BY:	M.E.	10/27/2017		
		SHEET 1 OF 1			Industrial Specialties Mfg. IS Med Specialties	

5 4 3 2 1