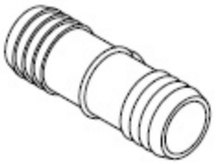

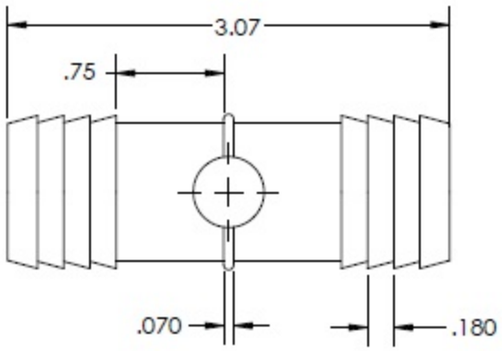

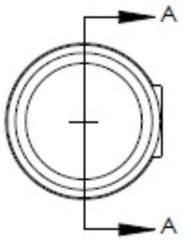

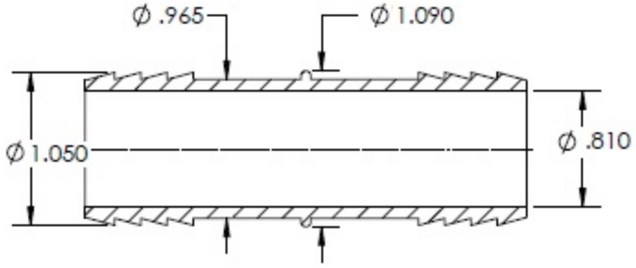

SECTION A-A

UNLESS OTHERWISE SPECIFIED:
DIMENSIONS ARE IN INCHES TOLERANCES: ANGULAR: ±0.5° X.X = ± 0.1 X.XX = ± 0.05 X.XXX = ± 0.015 REMOVE ALL SHARP EDGES AND BURRS BLEND ALL RADII TO 0.01IN
INTERPRET GEOMETRIC TOLERANCING PER: ANSI Y 14.5 1994

PROPRIETARY AND CONFIDENTIAL

THE INFORMATION CONTAINED IN THIS DRAWING IS THE SOLE PROPERTY OF INDUSTRIAL SPECIALTIES MFG. AND IS MED SPECIALITES. ANY REPRODUCTION IN PART OR AS A WHOLE WITHOUT THE WRITTEN PERMISSION OF INDUSTRIAL SPECIALTIES MFG. AND IS MED SPECIALITES IS PROHIBITED.

Description

1" Hose Barb Connector, Nylon

	NAME	DATE
DRAWN BY:	M.E.	10/18/2018

SHEET 1 OF 1

PART# **UCB-1-N**

REV 1

Industrial Specialties Mfg.

IS Med Specialties

5 4 3 2 1