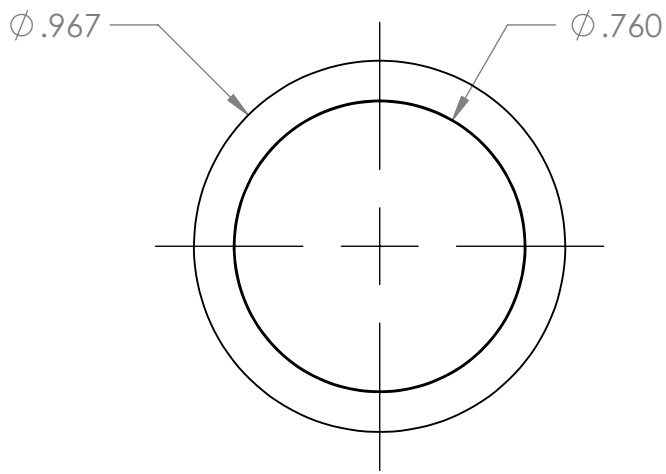

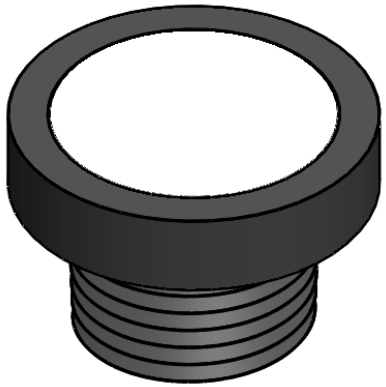

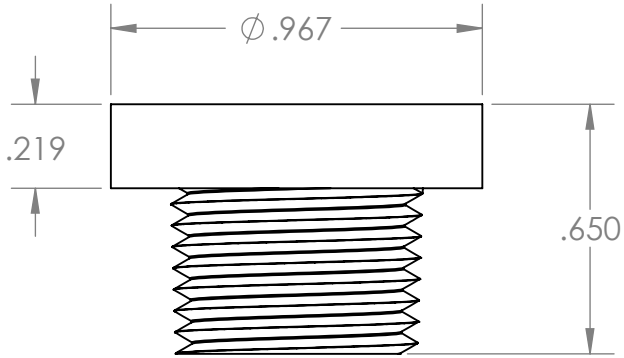

PROPRIETARY AND CONFIDENTIAL	Description		NAME	DATE	PART#
THE INFORMATION CONTAINED IN THIS DRAWING IS THE SOLE PROPERTY OF INDUSTRIAL SPECIALTIES MFG. AND IS MED SPECIALITES. ANY REPRODUCTION IN PART OR AS A WHOLE WITHOUT THE WRITTEN PERMISSION OF INDUSTRIAL SPECIALTIES MFG. AND IS MED SPECIALITES IS PROHIBITED.	3/8" Male NPT Breather Vent, 50 micron Porous Polypropylene Membrane, Black Polyethylene Thread Base	DRAWN BY:	M.E.	1/23/2015	PPBV-6-PE
		SHEET 1 OF 1			REV 1
		SCALE: 2:1			Industrial Specialties Mfg. IS Med Specialties
		DO NOT SCALE DRAWING			

5 4 3 2 1