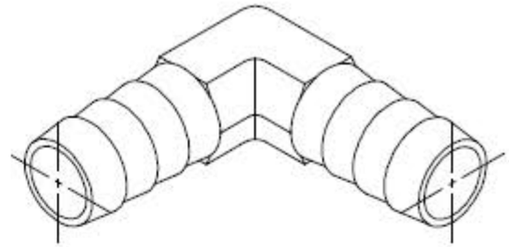

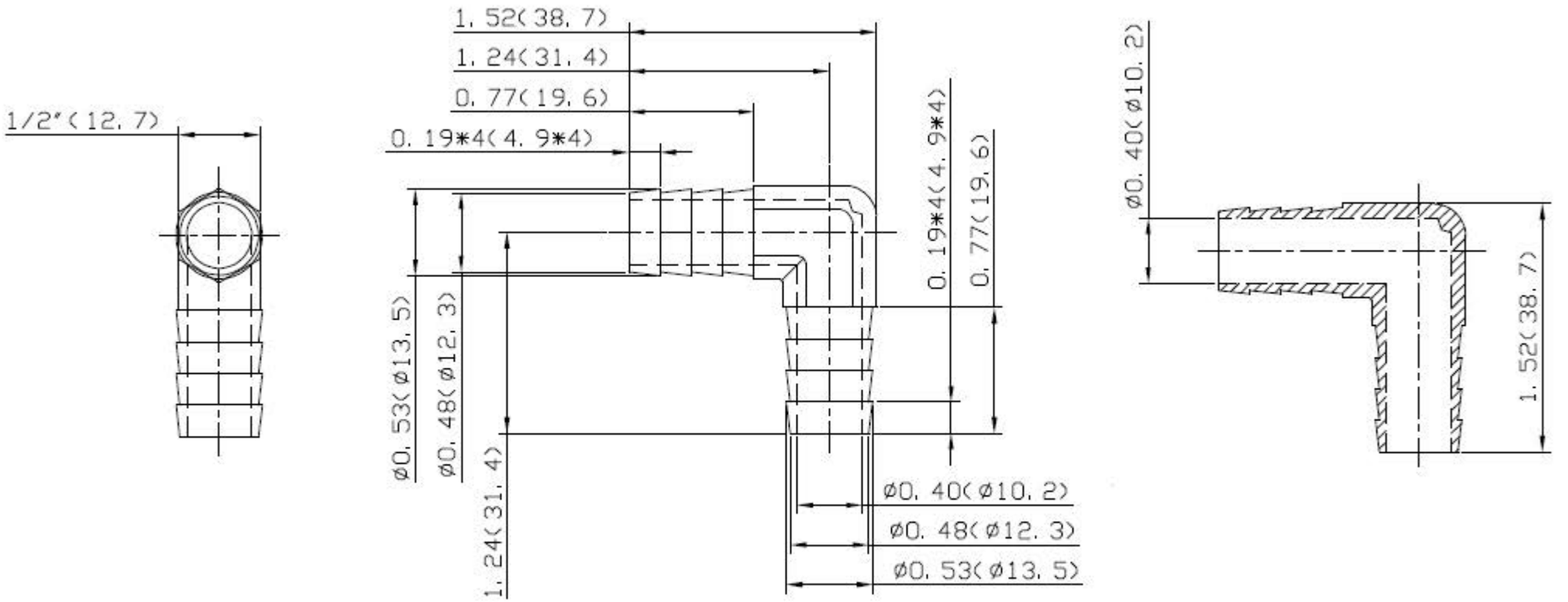

PROPRIETARY AND CONFIDENTIAL

THE INFORMATION CONTAINED IN THIS DRAWING IS THE SOLE PROPERTY OF INDUSTRIAL SPECIALTIES MFG. AND IS MED SPECIALITES. ANY REPRODUCTION IN PART OR AS A WHOLE WITHOUT THE WRITTEN PERMISSION OF INDUSTRIAL SPECIALTIES MFG. AND IS MED SPECIALITES IS PROHIBITED.

Description

1/2" Hose Barb Elbow, Brass

	NAME	DATE
DRAWN BY:	M.E.	3/18/2015

SHEET 1 OF 1

PART# **MBEE-12-B**

REV 1

Industrial Specialties Mfg.

IS Med Specialties

5 4 3 2 1