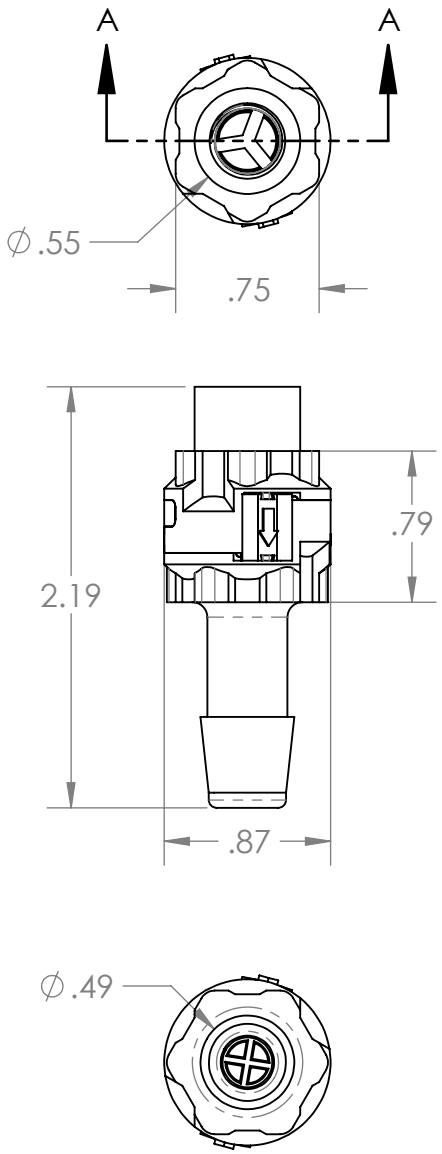

SECTION A-A
SCALE 1.5 : 1

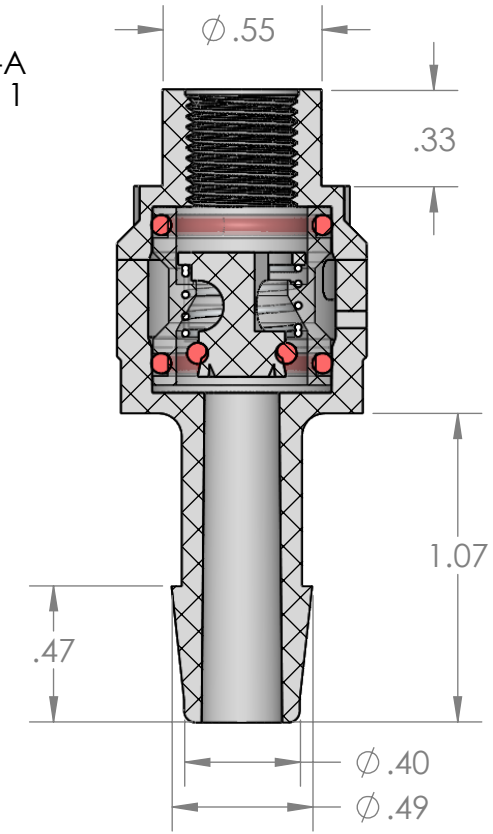

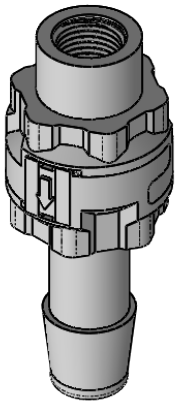

For Reference Only

PROPRIETARY AND CONFIDENTIAL	Description		NAME	DATE	PART#	REV
THE INFORMATION CONTAINED IN THIS DRAWING IS THE SOLE PROPERTY OF INDUSTRIAL SPECIALTIES MFG. AND IS MED SPECIALITES. ANY REPRODUCTION IN PART OR AS A WHOLE WITHOUT THE WRITTEN PERMISSION OF INDUSTRIAL SPECIALTIES MFG. AND IS MED SPECIALITES IS PROHIBITED.	1/8" Female BSPP x 3/8" Hose Barb Modular Check Valve, Flow from Thread to Barb, 30% Glass-Filled Polypropylene	DRAWN BY:	M.E.	9/28/2018	CVIS-G2F-38	1
		SHEET 1 OF 1			ISM Industrial Specialties Mfg. & IS MED Specialties (ISM)	
		SCALE: 1:1			industrialspec.com | 800-781-8486	
		DO NOT SCALE DRAWING				

5 4 3 2 1