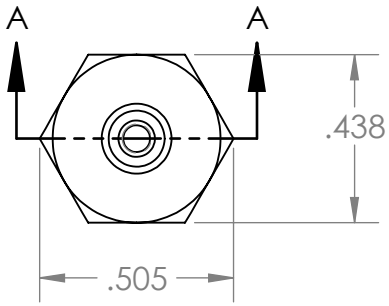

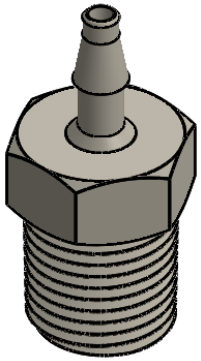

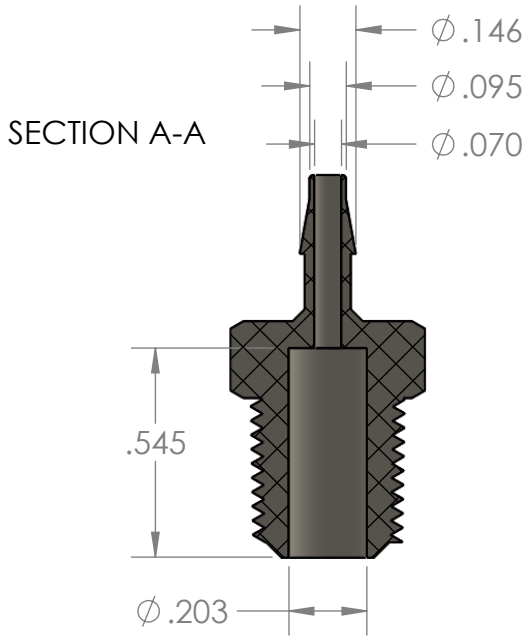

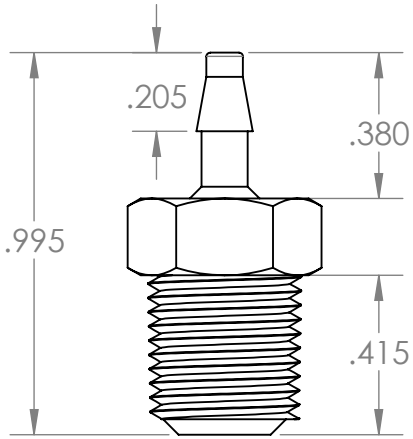

PROPRIETARY AND CONFIDENTIAL

THE INFORMATION CONTAINED IN THIS DRAWING IS THE SOLE PROPERTY OF INDUSTRIAL SPECIALTIES MFG. AND IS MED SPECIALITES. ANY REPRODUCTION IN PART OR AS A WHOLE WITHOUT THE WRITTEN PERMISSION OF INDUSTRIAL SPECIALTIES MFG. AND IS MED SPECIALITES IS PROHIBITED.

Description

3/32" Hose Barb x 1/8" Male NPT Adapter, Natural Nylon

MFR# CGA37-NR0

	NAME	DATE
DRAWN BY:	M.E.	7/13/2016

SHEET 1 OF 1

SCALE: 2:1

DO NOT SCALE DRAWING

PART# BFA-332-2-N

REV 1

Industrial Specialties Mfg.

IS Med Specialties

www.industrialspec.com
800-781-8487

5 4 3 2 1