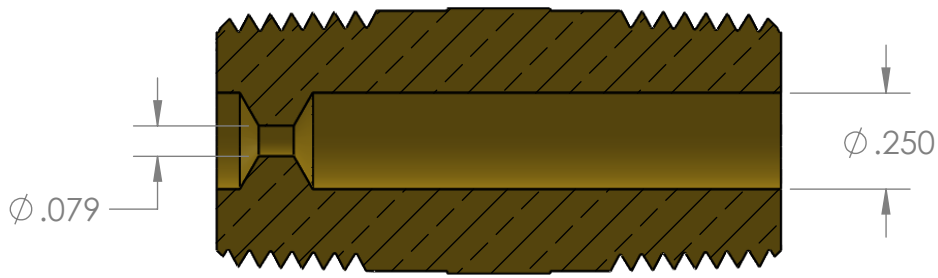

SECTION A-A

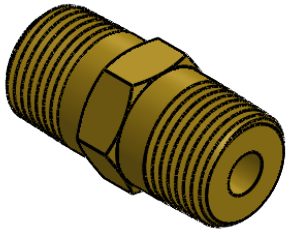

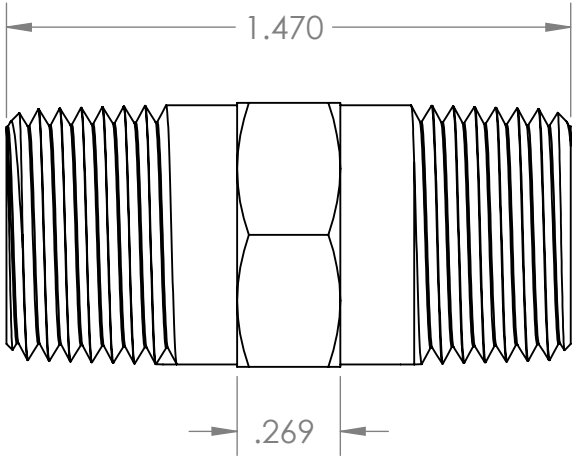

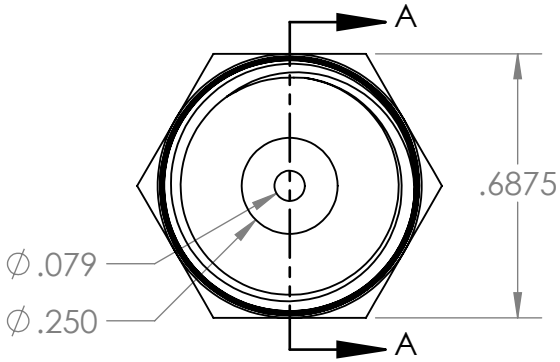

PROPRIETARY AND CONFIDENTIAL

THE INFORMATION CONTAINED IN THIS DRAWING IS THE SOLE PROPERTY OF INDUSTRIAL SPECIALTIES MFG. AND IS MED SPECIALITES. ANY REPRODUCTION IN PART OR AS A WHOLE WITHOUT THE WRITTEN PERMISSION OF INDUSTRIAL SPECIALTIES MFG. AND IS MED SPECIALITES IS PROHIBITED.

Description

3/8" Male NPT Orifice Hex Nipple, 0.079" Orifice, Brass

	NAME	DATE
DRAWN BY:	M.E.	10.06.2020

SHEET 1 OF 1

SCALE: 2:1

DO NOT SCALE DRAWING

PART# RIJ-6-079B

REV 1

ISM Industrial Specialties Mfg. & IS MED Specialties (ISM)

industrialspec.com | 800-781-8486

5 4 3 2 1