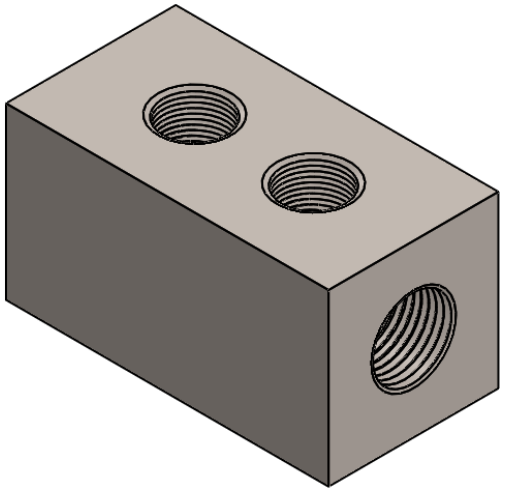

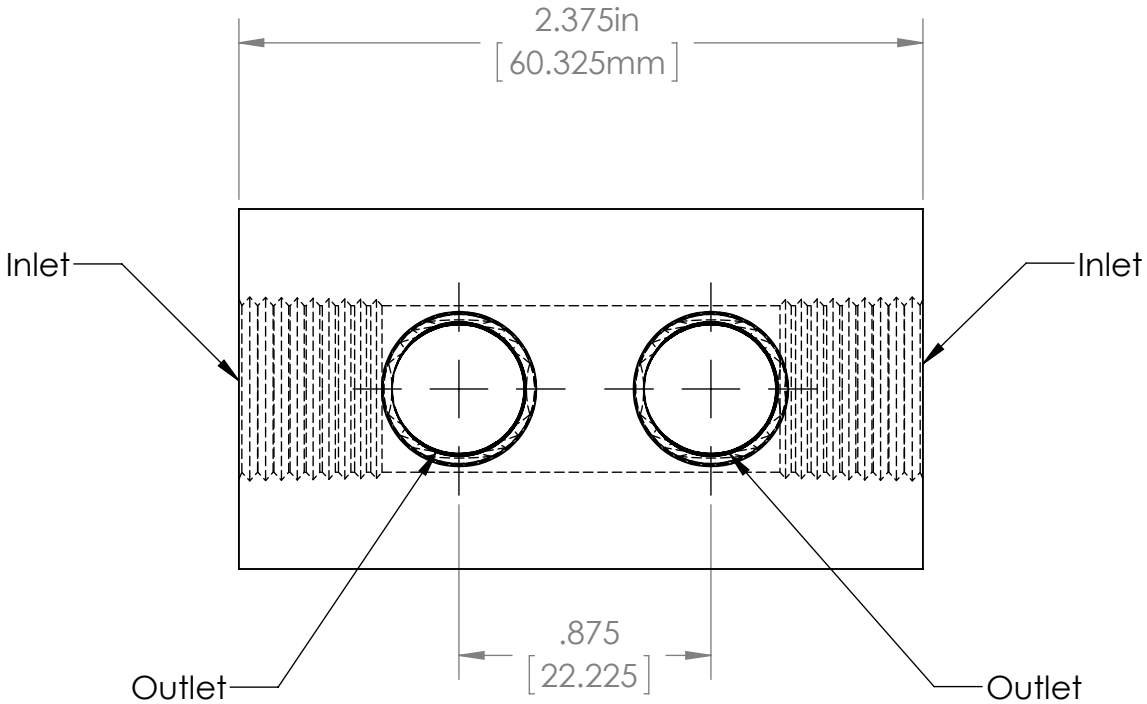

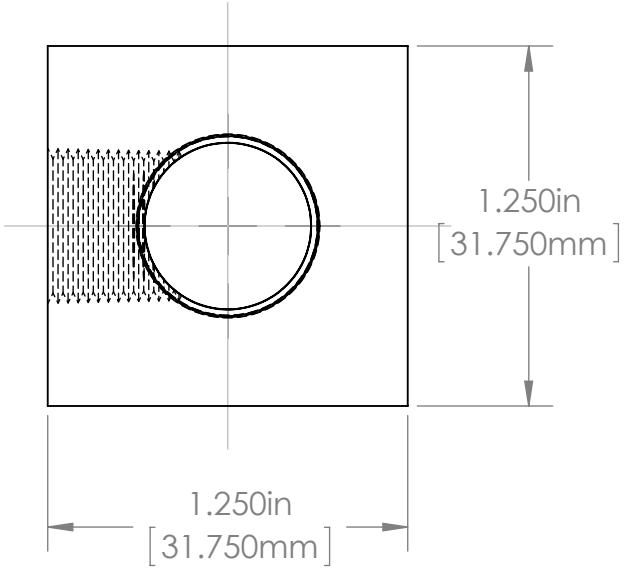

PROPRIETARY AND CONFIDENTIAL

THE INFORMATION CONTAINED IN THIS DRAWING IS THE SOLE PROPERTY OF INDUSTRIAL SPECIALTIES MFG. AND IS MED SPECIALITES. ANY REPRODUCTION IN PART OR AS A WHOLE WITHOUT THE WRITTEN PERMISSION OF INDUSTRIAL SPECIALTIES MFG. AND IS MED SPECIALITES IS PROHIBITED.

Description

2 Port Manifold,
3/8" Female Inlet x 1/4" Female Outlets,
316 Stainless Steel

	NAME	DATE
DRAWN BY:	M.E.	5/9/2014

SHEET 1 OF 1

SCALE: 3:2

DO NOT SCALE DRAWING

PART#
MMF-2-6F-4F-SS316

REV
1

Industrial Specialties Mfg.
IS Med Specialties

5 4 3 2 1