8300222

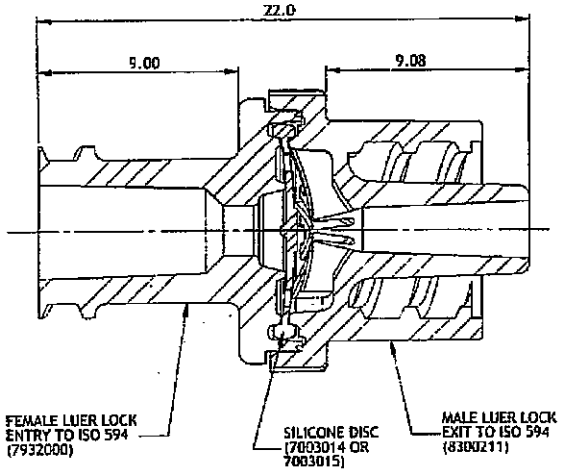

SECTION A-A

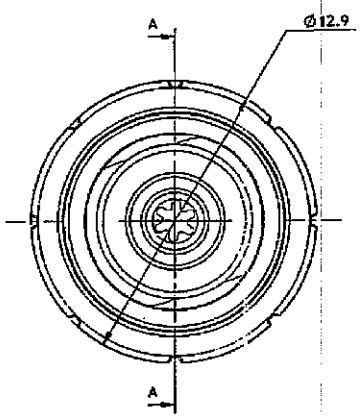

PLAN VIEW

MASTER COPY

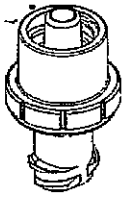

ISOMETRIC VIEW
SCALE 2:1

MEDIA: N/A.

RESIN: BASF TERLUX 2802 HD.

MASTERBATCH: ENTRY - NONE. EXIT - NONE.

REV	DESCRIPTION	DATE
001	ADDITIONAL SILICONE DISC PART NUMBER 7003015 ADDED. WELD SKIRT ON MALE EXIT UPDATED	04/01/09

THIRD ANGLE PROJECTION

PROPRIETARY NOTICE

THIS DRAWING CONTAINS INFORMATION THAT IS PROPRIETARY TO FILTERTEK AND SHOULD NOT BE USED WITHOUT WRITTEN PERMISSION.

DRAWN BY: 2/7/07

CHECKED: 6/3/09

APPROVED: 6/15/2009

TITLE:

CHECK VALVE,
ANTI OCCLUDE
LOW OPENING PRESSURE,
FLL ENTRY TO MLL EXIT.

TO DIN 16 901

MILLIMETERS

SCALE: 5:1

FILTERTEK

DO NOT SCALE DRAWING
REVISE ONLY ON CAD

CUSTOMER PART NO: N/A

DRAWING NO: 8300222

SHEET: 1 OF 1

A3

COPYRIGHT © FILTERTEK B.V. 2009