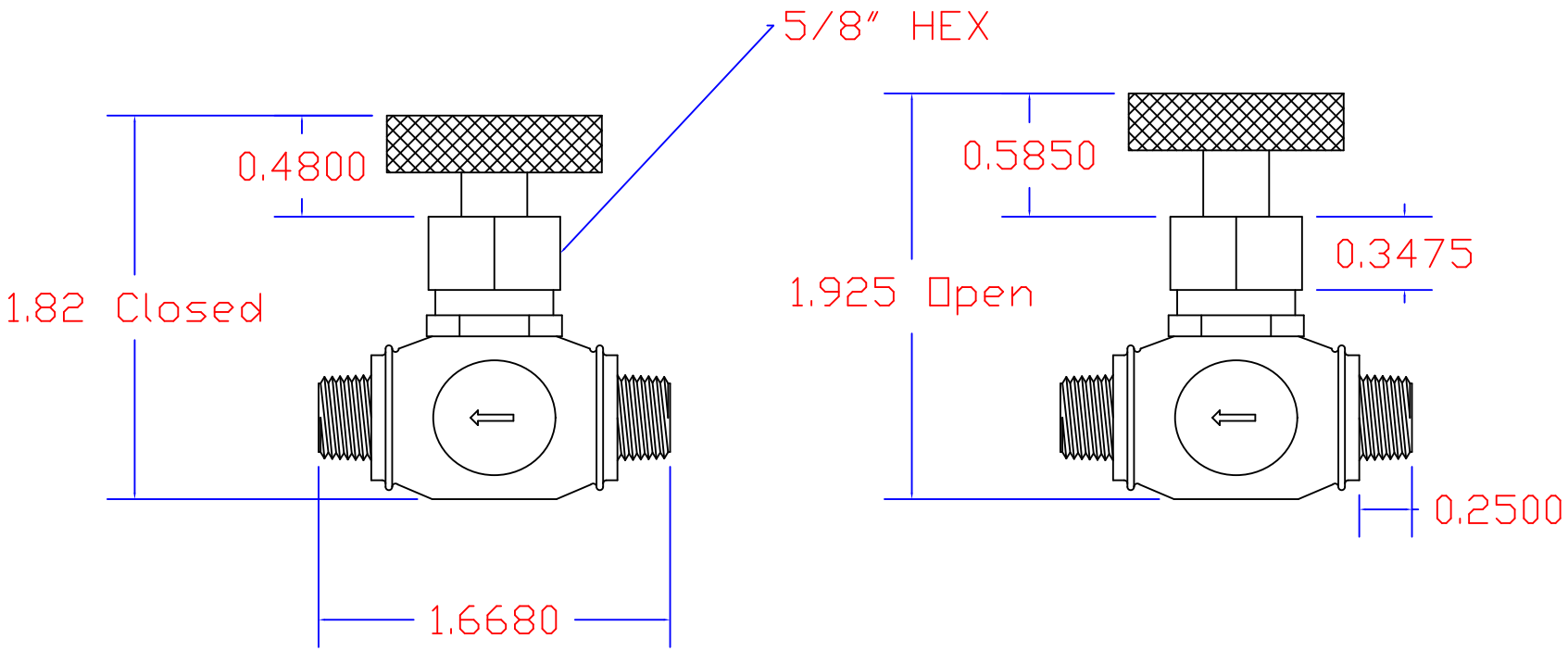

INDUSTRIAL SPECIALTIES MFG.		
DRAWING NAME: VNF-2M-B		
MATERIAL: Brass	DRAWING NUMBER: 1	REV. 1
M.E.	Page 1 of 2	3/11/2011

THIS DOCUMENT IS PROPERTY OF INDUSTRIAL SPECIALTIES MFG.
ANY REPRODUCTION, DISCLOSURE, OR USE OF THIS DOCUMENT IS
EXPRESSLY PROHIBITED UNLESS OTHERWISE AGREED UPON IN WRITING.
ALL SPECIFICATIONS SUBJECT TO CHANGE WITHOUT NOTICE.