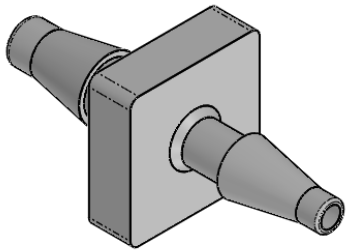

SECTION A-A

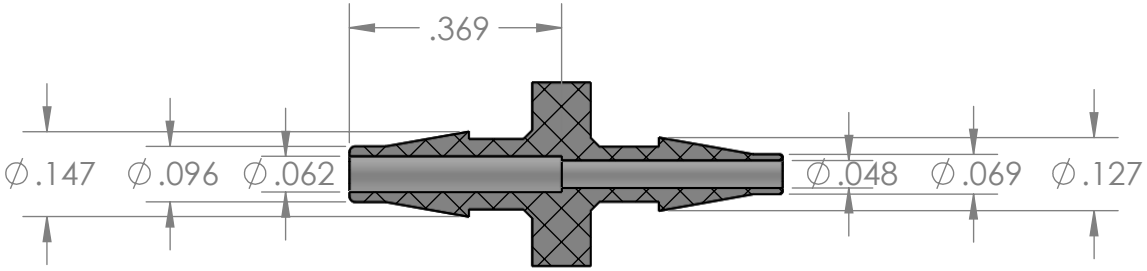

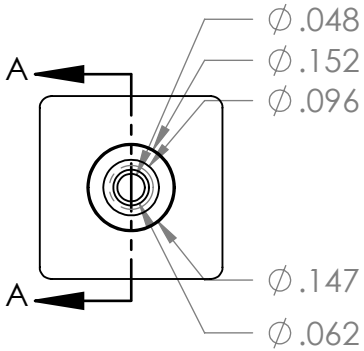

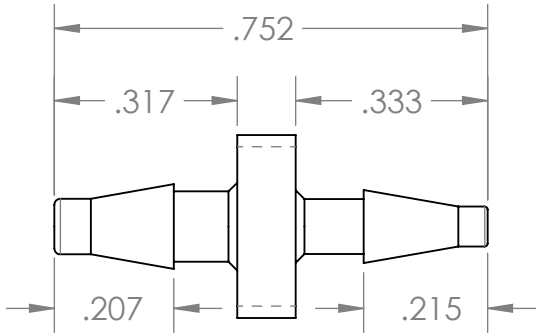

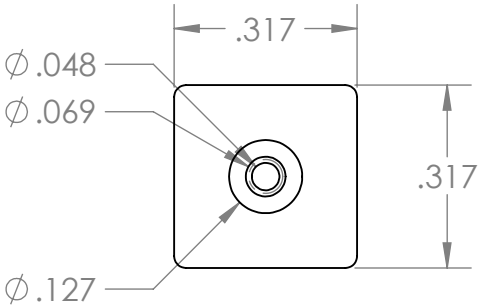

PROPRIETARY AND CONFIDENTIAL	**Description**		NAME	DATE	**PART#** VCA-332116-PP	REV 1
THE INFORMATION CONTAINED IN THIS DRAWING IS THE SOLE PROPERTY OF INDUSTRIAL SPECIALTIES MFG. AND IS MED SPECIALITES. ANY REPRODUCTION IN PART OR AS A WHOLE WITHOUT THE WRITTEN PERMISSION OF INDUSTRIAL SPECIALTIES MFG. AND IS MED SPECIALITES IS PROHIBITED.	3/32" Hose Barb x 1/16" Hose Barb Connector, Natural Polypropylene MFR# CAD64-PR0	DRAWN BY:	M.E.	8/29/2016	
		SHEET 1 OF 1			**Industrial Specialties Mfg.** **IS Med Specialties** www.industrialspec.com 800-781-8487
		SCALE: 3:1			
		DO NOT SCALE DRAWING			

5 4 3 2 1