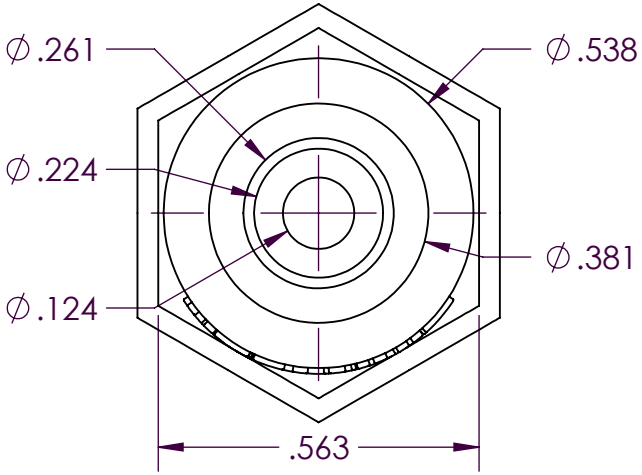

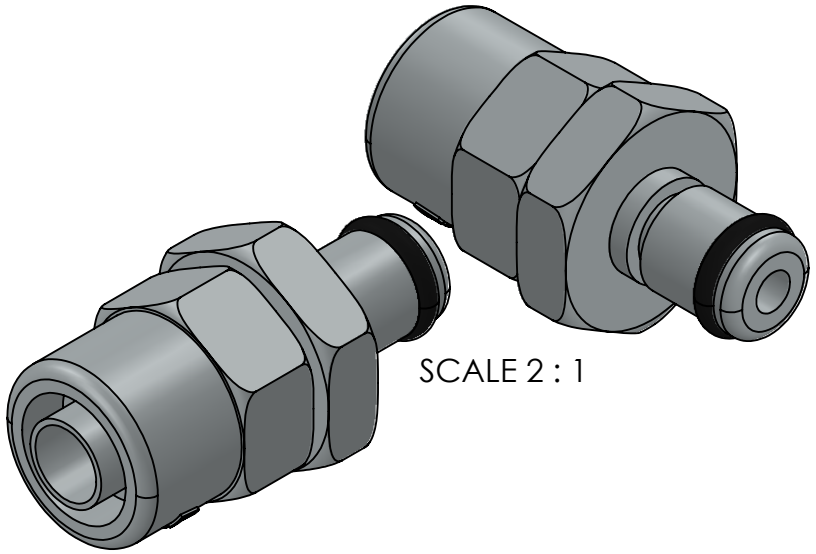

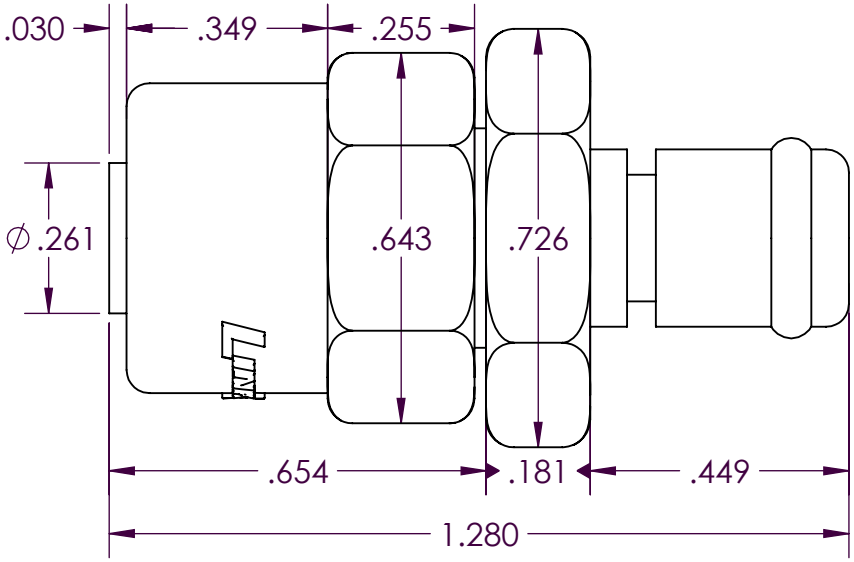

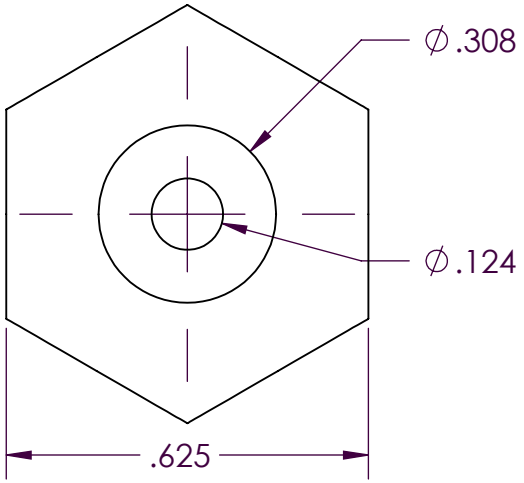

PROPRIETARY AND CONFIDENTIAL

THE INFORMATION CONTAINED IN THIS DRAWING IS THE SOLE PROPERTY OF INDUSTRIAL SPECIALTIES MFG. AND IS MED SPECIALITES. ANY REPRODUCTION IN PART OR AS A WHOLE WITHOUT THE WRITTEN PERMISSION OF INDUSTRIAL SPECIALTIES MFG. AND IS MED SPECIALITES IS PROHIBITED.

Description

3/8" OD Tube Size,
Non-Valved In-Line PTF Plug Coupling,
1/8" Flow,
Chrome Plated Brass Body and Terminations,
Nickel Plated Brass PTF Nut,
Buna-N O-Ring Seal

	NAME	DATE
DRAWN BY:	SCW	24-Feb-2015

SHEET 1 OF 3

SCALE 3:1

DO NOT SCALE DRAWING

PART# 20CB-PB9-06

REV 1

Industrial Specialties Mfg.
IS Med Specialties

5 4 3 2 1

Specifications

Body and Termination Material	Food Grade Chrome Plated Brass
Seal Material Option	FDA & NSF Compliant Buna-N O-ring Seal
PTF (Ferruless Polytube Fitting) Nut	Electrodeposited Nickel Plated Brass
Tube Size	3/8" OD, .25" ID
Metric Tube Size	9.5mm OD, 6.4mm ID
Flow Capacity	1/8" Size
Operating Pressure Range	Vacuum to 250 psi (17.3 bar)
Operating Temperature Range	-40° F to 180° F (-40° C to 82° C)
Compatibility Statement	It is the sole responsibility of the system designer and user to select products suitable for their specific application requirements and to ensure proper installation, operation, and maintenance of these products. Material compatibility, product ratings and application details should be considered in the selection. Improper selection or use of products described herein can cause personal injury or product damage.

20CB Series Air Flow

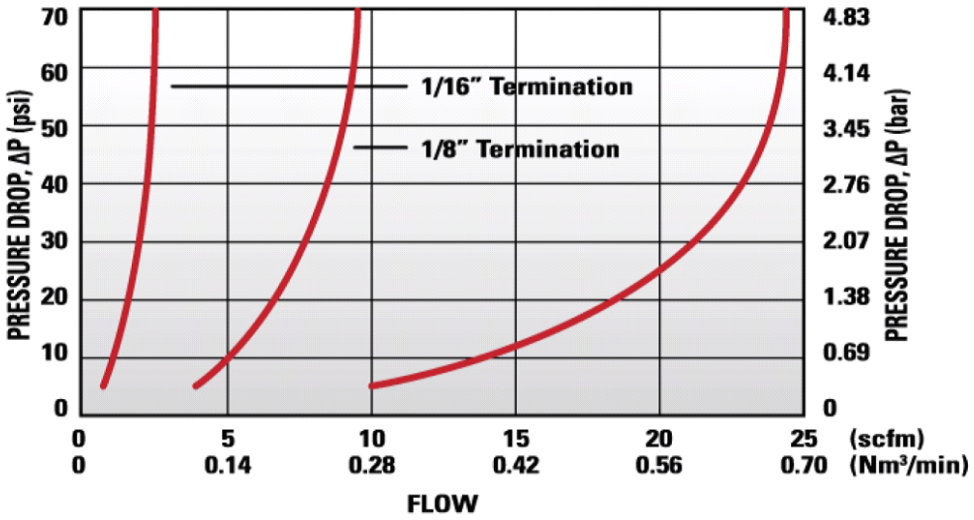

20CB Series Water Flow

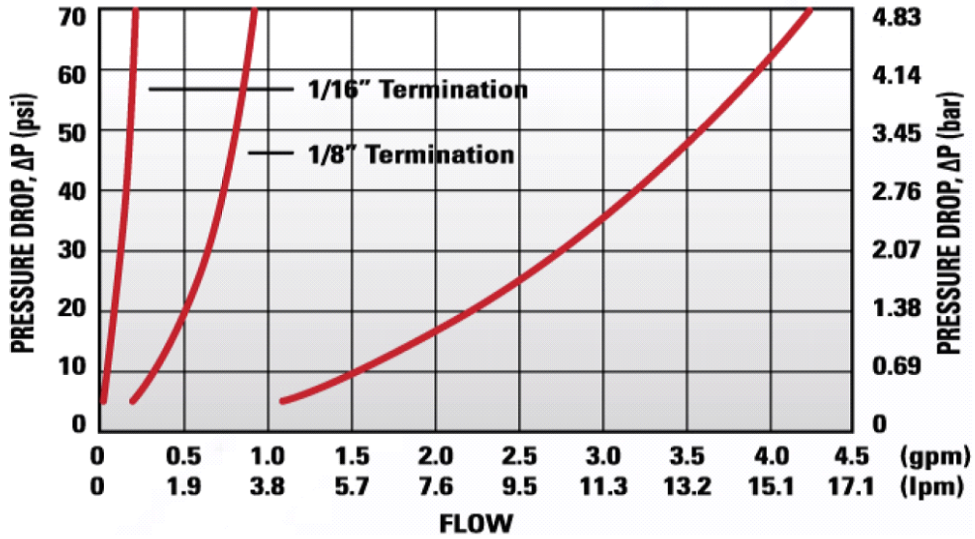

These graphs are intended to give you a general idea of the performance capabilities of the product line.