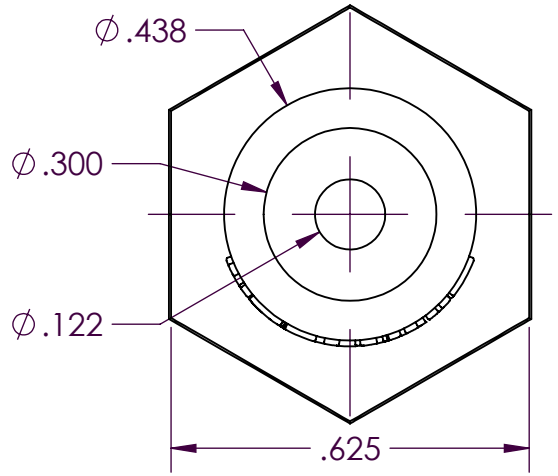

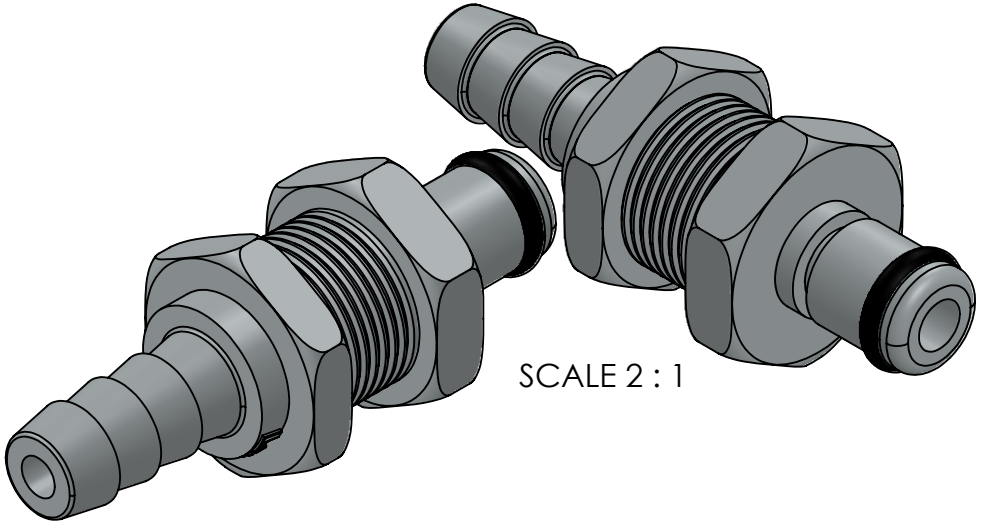

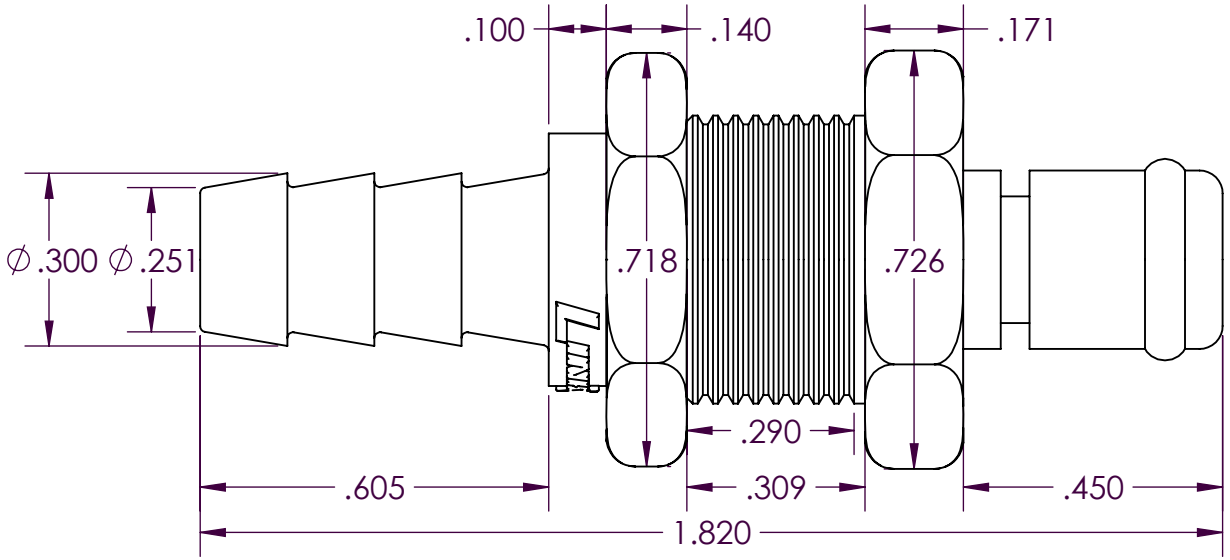

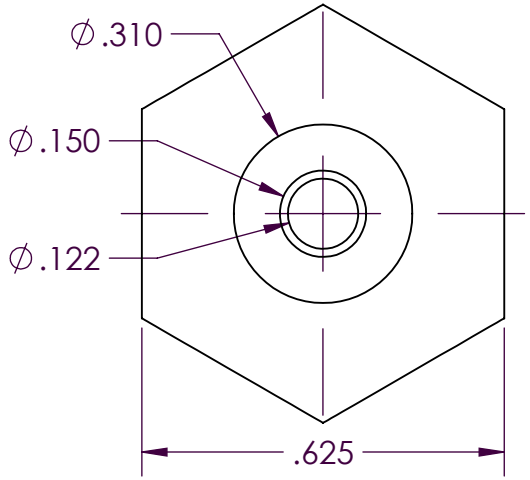

PROPRIETARY AND CONFIDENTIAL

THE INFORMATION CONTAINED IN THIS DRAWING IS THE SOLE PROPERTY OF INDUSTRIAL SPECIALTIES MFG. AND IS MED SPECIALITES. ANY REPRODUCTION IN PART OR AS A WHOLE WITHOUT THE WRITTEN PERMISSION OF INDUSTRIAL SPECIALTIES MFG. AND IS MED SPECIALITES IS PROHIBITED.

Description

1/4" Hose Barb,
Non-Valved Panel Mount
Hose Barb Plug Coupling,
1/8" Flow,
Chrome Plated Brass Body and Terminations,
Buna-N O-Ring Seal, Nickel Plated Brass Panel Nut

	NAME	DATE
DRAWN BY:	SCW	27-Feb-2015

SHEET 1 OF 3

SCALE 3:1

DO NOT SCALE DRAWING

PART# 20CB-PB3-04

REV 1

Industrial Specialties Mfg.
IS Med Specialties

5 4 3 2 1

Specifications

Body and Termination Material	Food Grade Chrome Plated Brass
Seal Material Option	FDA & NSF Compliant Buna-N O-ring Seal
Panel Mount Nut	5/8" Electrodeposited Nickel Plated Brass
Panel Mount Nut Thread	1/2" - 24UNS
Operating Pressure Range	Vacuum to 250 psi (17.3 bar)
Operating Temperature Range	-40° F to 180° F (-40° C to 82° C)
Hose Barb Size	1/4" ID, 6.4mm ID
Flow Capacity	1/8" Size
Compatibility Statement	It is the sole responsibility of the system designer and user to select products suitable for their specific application requirements and to ensure proper installation, operation, and maintenance of these products. Material compatibility, product ratings and application details should be considered in the selection. Improper selection or use of products described herein can cause personal injury or product damage.

Panel Mount Dimensions

	PANEL OPENING	MAX PANEL THICKNESS	MIN PANEL THICKNESS
SOCKETS	Per Drawing	0.5"	0.05"
PLUGS	0.5"	0.3"	0.05"

PANEL NUT HEX SIZE	PANEL NUT THREAD
5/8"	1/2" - 24UNS

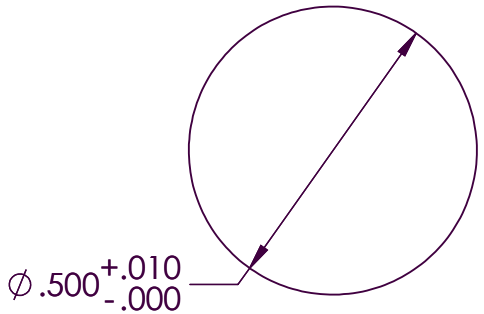

5 4 3 2 1

20PP Series Air Flow

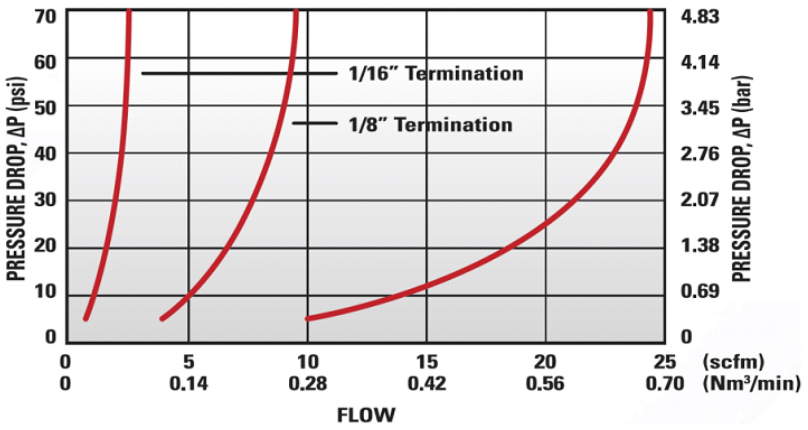

20PP Series Water Flow

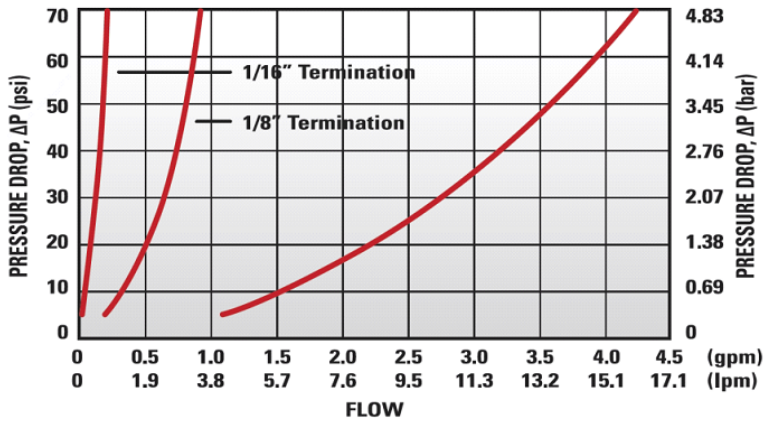

Specific coupling combination flow rates can be determined by using this formula:	$Q = C_V \times SQRT(\Delta P/S)$ SQRT = Square root Q = Flow rate in gallons per minute C_V = Average flow rate (see chart) ΔP = Pressure drop across coupling (psi) S = Specific gravity of liquid

C_V Values for the 20CB-PB3-04

Non-Valved Panel Mount Hose Barb Plug Coupling

Sockets:	20CBV-SB2-04	20CB-S2-04	20CBV-SB3-02	20CB-S3-02	20CBV-SB3-04	20CB-S3-04
20CB-PB3-04	0.26	0.45	0.19	0.27	0.26	0.45

Sockets:	20CBV-SB8-04	20CB-S8-04	20CBV-SB1-02	20CB-S1-02	20CBV-SB1-04	20CB-S1-04
20CB-PB3-04	0.22	0.40	0.28	0.50	0.30	0.50