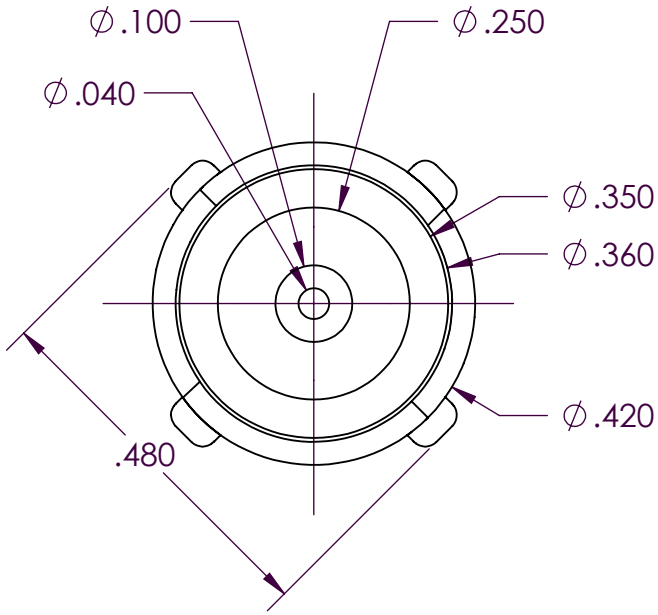

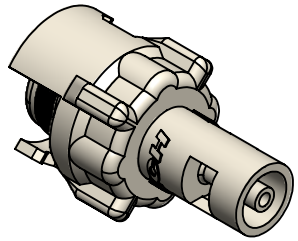

SCALE 2 : 1

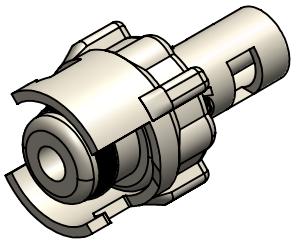

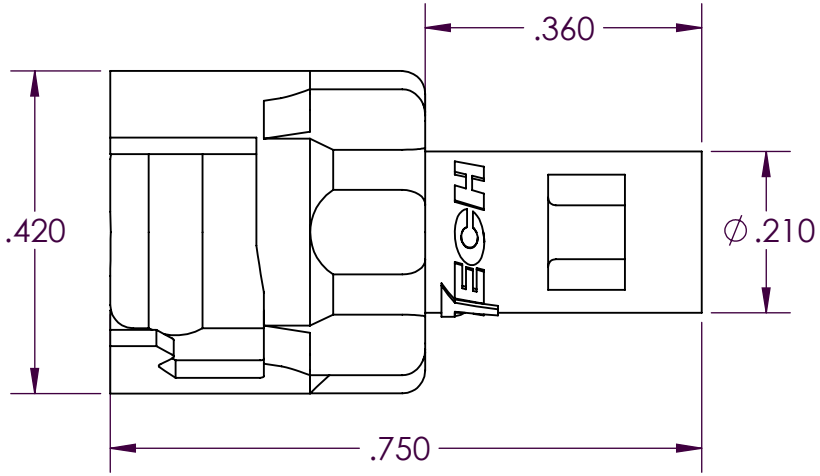

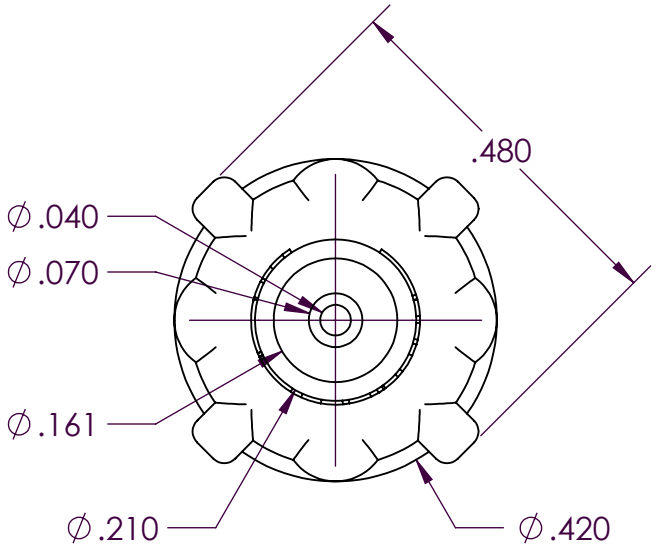

PROPRIETARY AND CONFIDENTIAL	Description		NAME	DATE	PART#	REV
THE INFORMATION CONTAINED IN THIS DRAWING IS THE SOLE PROPERTY OF INDUSTRIAL SPECIALTIES MFG. AND IS MED SPECIALITES. ANY REPRODUCTION IN PART OR AS A WHOLE WITHOUT THE WRITTEN PERMISSION OF INDUSTRIAL SPECIALTIES MFG. AND IS MED SPECIALITES IS PROHIBITED.	1/16" Srouded Hose Barb, Non-Valved Twist Lock Type In-Line Hose Barb Plug, 1/16" Flow, Buna-N O-ring Seal, Natural Acetal Body, Terminations & Lock Sleeve	DRAWN BY:	SCW	08-Oct-14	10AC-PB2-01	1
		SHEET 1 OF 3				
		SCALE: 4:1				
		DO NOT SCALE DRAWING				

Industrial Specialties Mfg.
IS Med Specialties

5 4 3 2 1

Specifications

Body and Termination Material	Natural Acetal (POM) - FDA and NSF Compliant for Food Contact
Lock Sleeve Material	Natural Acetal (POM) - FDA and NSF Compliant for Food Contact
Seal Material Option	Buna-N O-ring - FDA and NSF Compliant for Food Contact O-rings lubricated with Dow Corning 200 food grade silicone oil.
Operating Pressure Range	Vacuum to 100 psi (6.9 bar)
Operating Temperature Range	-40° F to 180° F (-40° C to 82° C)
Flow Capacity	1/16" Size
Barb Size	1/16", 1.6mm
Compatibility Statement	It is the sole responsibility of the system designer and user to select products suitable for their specific application requirements and to ensure proper installation, operation, and maintenance of these products. Material compatibility, product ratings and application details should be considered in the selection. Improper selection or use of products described herein can cause personal injury or product damage.

5 4 3 2 1

10AC and 10PP Series Air Flow

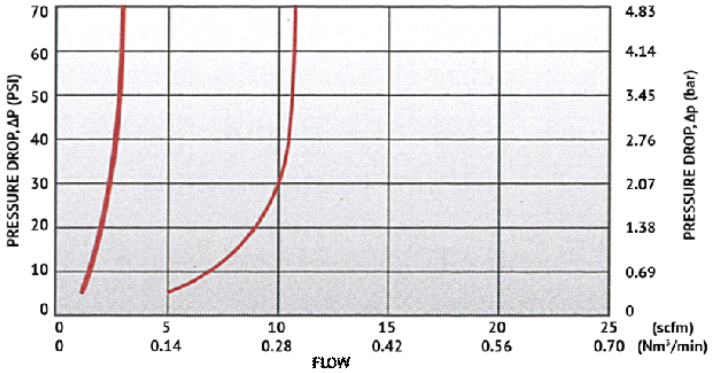

10AC and 10PP Series Water Flow

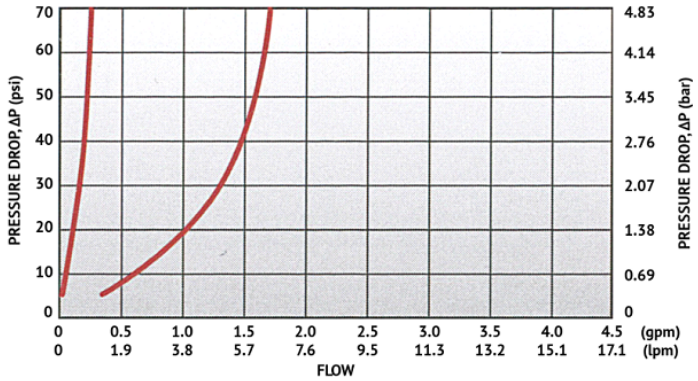

Specific coupling combination flow rates can be determined by using this formula:	$Q = C_v \times SQRT(\Delta P/S)$ SQRT = Square root Q = Flow rate in gallons per minute C_v = Average flow rate (see chart) ΔP = Pressure drop across coupling (psi) S = Specific gravity of liquid

C_v Values for the 10AC-PB2-01 Plug

SOCKETS:	10AC-PB2-01
10AC-S2-01	0.03
10ACV-SB2-01	0.03
10AC-S2-02	0.03
10ACV-SB2-02	0.03
10AC-S3-01	0.03
10ACV-SB3-01	0.03
10AC-S3-02	0.03
10ACV-SB3-02	0.03

5 4 3 2 1